Electrolux PROFESSIONAL

High Productivity Cooking Electric Tilting Braising Pan, 60lt, Wall mounted

ITEM #

MODEL #

NAME #

SIS #

AIA #

586191 (PFET06EUEO) Electric tilting Braising Pan 60lt with compound bottom, wall mounted

Short Form Specification

Item No.

AISI 304 stainless steel construction. GN compliant pan size; 18mm thick pan bottom (15mm mild steel and 3 mm AISI 316 stainless steel). Insulated and counterbalanced lid. Motorized tilting with variable speed control. Pan can be tilted beyond 90° to completely empty the food. The electric heating elements are mounted under the well. Safety thermostat protects the pan from overheating. A precise, electronic control of pan bottom temperature ensures fast reaction and exact adherence to preselected cooking temperatures between 50° and 250°C. TOUCH control panel. SOFT function. Possibility to store recipes in single or multiphase cooking process, with different temperature settings. Built in temperature sensors for precise control of cooking process. IPX6 water resistant. Configuration: wall mounted.

APPROVAL:

Main Features

- Pan size is GN compliant.
- Easy to clean cooking surface due to large-radius edges and corners.
- Thermoblock heating system for optimal temperature distribution and high temperature stability.
- Pan bottom with two individually adjustable heating zones, each with a temperature sensor.
- IPX6 water resistant.
- Temperature sensors provides efficient temperature control: the power is supplied as and when required to keep the set temperature value without exceeding it.
- Optimum heat distribution in the food provides best cooking results in terms of taste, colour and consistency and in terms of vitamin preserving.
- Motorized, variable pan tilting with "SOFT STOP". Tilting and pouring speeds can be precisely adjusted. Pan can be tilted over 90° to facilitate pouring and cleaning operations.
- Built in temperature sensor to precisely control the cooking process.
- No overshooting of cooking temperatures, fast reaction.
- USB connection to easily update the software, upload/download recipes and download HACCP data.
- Multifunctional cooking appliance used for roasting, pot-roasting, braising, simmering, boiling and steaming.

Construction

- External panelling and internal frame made of 1.4301 (AISI 304) stainless steel.
- Multipurpose non-stick cooking surface in 18 mm thick compound: 3 mm shot-blasted 1.4404 (AISI 316L) stainless steel surface, seamlessly welded to the mild steel bottom.
- Double-lined insulated lid in 1.4301 (AISI 304) stainless steel mounted on the cross beam of the unit, counterbalanced by a hinge that remains open in all positions.
- 15 mm thick heating layer concealed below the entire pan bottom, to provide high thermal diffusion and heat storage properties.
- Water mixing tap is available as optional accessory to make water filling and pan cleaning easier.
- Heatproof handle with non-slip surface.
- Front-mounted inclined led "TOUCH" control panel with recessed deep drawn casing, features self-explanatory display functions which guide operator throughout the cooking

process: simultaneous display of actual and set temperature as well as set cooking time and remaining cooking time; real time clock; "SOFT" control for gentle heating up for delicate food; 9 power simmering levels from gentle to heavy boiling; timer for deferred start; error display for quick trouble-shooting.

- Possibility to store recipes in single or multiphase cooking process, with different temperature settings.
- Minimised presence of narrow gaps for easier cleaning of the sides to meet the highest hygiene standards.
- Can be prearranged for energy optimisation or external surveillance systems (optional).
- 98% recyclable by weight; packaging material free of toxic substances.
- Lateral surface of the vessel in DIN 1.4301/AISI 304.
- Front-mounted inclined led "TOUCH" control panel with recessed deep drawn casing, features self-explanatory display functions which guide operator throughout the cooking process: simultaneous display of actual and set temperature as well as set cooking time and remaining cooking time; real time clock; "SOFT" cooking function for gentle heating up for delicate food; 9 power simmering levels from gentle to heavy boiling; timer for deferred start; error display for quick trouble-shooting.

User Interface & Data Management

- Connectivity ready for real time access to connected appliances from remote and data monitoring (requires optional accessory – contact the Company for more details).

Sustainability

- High-quality thermal insulation of the pan saves energy and keeps operating ambient temperature low.

Optional Accessories

• Strainer for dumplings for all tilting & stationary braising and pressure braising pans (except 80lt) and for all stationary rectangular and 100lt round boiling pans	PNC 910053	❑
• Scraper for dumpling strainer for boiling and braising pans	PNC 910058	❑
• Perforated container with handles 1/1GN (height 150mm) for boiling and braising pans	PNC 910212	❑
• Small perforated shovel for braising pans (PFEN/PUEN)	PNC 911577	❑
• Small shovel for braising pans (PFEN/PUEN)	PNC 911578	❑
• C-board (length 1200mm) for tilting units - factory fitted	PNC 912184	❑
• Power Socket, CEE16, built-in, 16A/400V, IP67, red-white - factory fitted	PNC 912468	❑
• Power Socket, CEE32, built-in, 32A/400V, IP67, red-white - factory fitted	PNC 912469	❑
• Power Socket, SCHUKO, built-in, 16A/230V, IP68, blue-white - factory fitted	PNC 912470	❑
• Power Socket, TYP23, built-in, 16A/230V, IP55, black - factory fitted	PNC 912471	❑
• Power Socket, TYP25, built-in, 16A/400V, IP55, black - factory fitted	PNC 912472	❑
• Power Socket, SCHUKO, built-in, 16A/230V, IP55, black - factory fitted	PNC 912473	❑
• Power Socket, CEE16, built-in, 16A/230V, IP67, blue-white - factory fitted	PNC 912474	❑
• Power Socket, TYP23, built-in, 16A/230V, IP54, blue - factory fitted	PNC 912475	❑
• Power Socket, SCHUKO, built-in, 16A/230V, IP54, blue - factory fitted	PNC 912476	❑
• Power Socket, TYP25, built-in, 16A/400V, IP54, red-white - factory fitted	PNC 912477	❑
• Connecting rail kit for appliances with backsplash, 850mm	PNC 912498	❑
• Suspension frame GN1/1 for tilting braising pans	PNC 912709	❑
• Automatic water filling (hot and cold) for tilting units - to be ordered with water mixer - factory fitted	PNC 912735	❑
• Kit energy optimization and potential free contact - factory fitted	PNC 912737	❑
• Mainswitch 25A, 4mm² - factory fitted	PNC 912773	❑
• Spray gun for tilting units - against wall (height 400mm) - factory fitted	PNC 912775	❑
• Food tap 2" for tilting braising pans (PUET-PFET) - factory fitted	PNC 912780	❑
• Emergency stop button - factory fitted	PNC 912784	❑
• 1 basket 1/1 GN for 40lt pasta cooker, ProThermetic braising and pressure braising pans, GN compatible (to be combined with suspension frame)	PNC 913134	❑
• Scraper without handle for braising pans (PFEX/PUEX)	PNC 913431	❑
• Scraper with vertical handle for braising pans (PFEX/PUEX)	PNC 913432	❑
• Mixing tap with drip stop, two knobs, 815mm height, 600mm swivelling depth for PBOT/PFET - factory fitted	PNC 913554	❑
• Mixing tap with drip stop, two knobs, 815mm height, 450mm swivelling depth for PBOT/PFET - factory fitted	PNC 913555	❑
• Mixing tap with drip stop, two knobs, 685mm height, 600mm swivelling depth for PBOT/PFET - factory fitted	PNC 913556	❑
• Mixing tap with drip stop, two knobs, 685mm height, 450mm swivelling depth for PBOT/PFET - factory fitted	PNC 913557	❑
• Mixing tap with two knobs, 520mm height, 600mm swivelling depth for PXXT- KWC - factory fitted	PNC 913567	❑
• Mixing tap with one lever, 564mm height, 450mm swivelling depth for PXXT- KWC - factory fitted	PNC 913568	❑
• Connectivity kit for ProThermetic Boiling and Braising Pans ECAP - factory fitted	PNC 913577	❑

Recommended Detergents

The company reserves the right to make modifications to the products without prior notice. All information correct at time of printing.

- C41 HI-TEMP RAPID DEGREASER. Suitable for cleaning plates and grills with high temperature surfaces (max 175°C). Pack of 6 1l bottles (includes 1 spray bottle code 0S2331) PNC 0S2292 ❑

The company reserves the right to make modifications to the products without prior notice. All information correct at time of printing.

High Productivity Cooking
Electric Tilting Braising Pan, 60lt, Wall mounted

Front

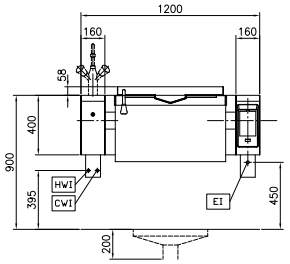

Side

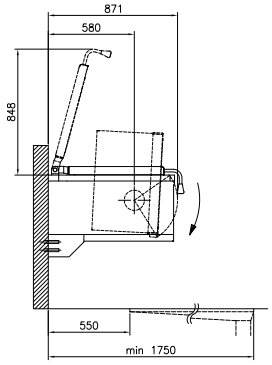

CWI1 = Cold Water inlet 1 (cleaning)
EI = Electrical inlet (power)
HWI = Hot water inlet

Top

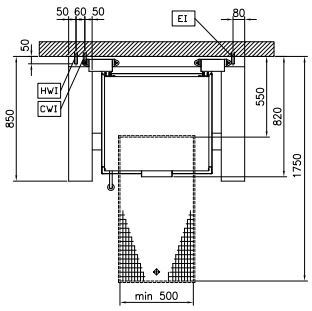

Electric

Supply voltage:	
586191 (PFET06EUEO)	400 V/3N ph/50/60 Hz
Total Watts:	15.5 kW

Installation:

Type of installation:	Wall mounted

Key Information:

Configuration:	Rectangular;Tilting
Working Temperature MIN:	50 °C
Working Temperature MAX:	250 °C
Vessel (rectangle) width:	680 mm
Vessel (rectangle) height:	158 mm
Vessel (rectangle) depth:	558 mm
External dimensions, Width:	1200 mm
External dimensions, Depth:	850 mm
External dimensions, Height:	400 mm
Net weight:	210 kg
Net vessel useful capacity:	45 lt
Tilting mechanism:	Automatic
Double jacketed lid:	✓
Heating type:	Direct

The company reserves the right to make modifications to the products without prior notice. All information correct at time of printing.